Art Heroes

ArtFrame™ Manual

SCAN TO WATCH
TUTORIAL.

ARTHEROES.COM

Included as standard

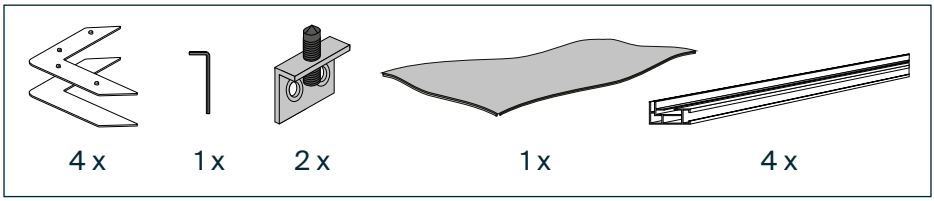

Optional: set of sound-absorbing panels, struts (depending on format of the ArtFrame).

1. Lay the frame out on the ground

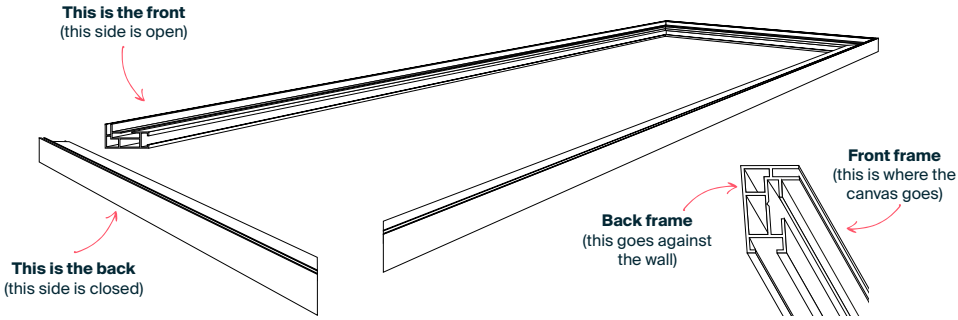

2. Slide the corner pieces into the frames and secure them tight

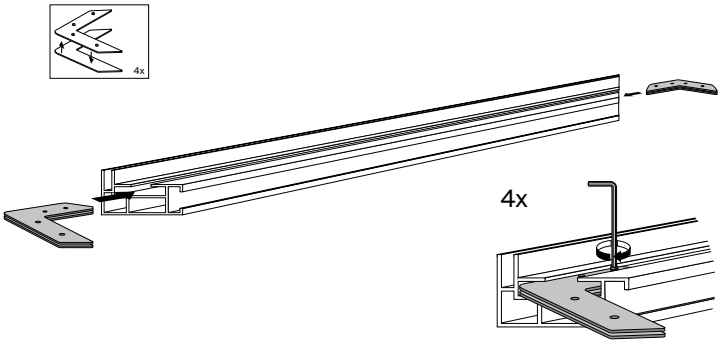

Alternatively, your frame might consist of several parts or comes with a strut; scan the QR-code above for these steps.

3. Screw the mounting brackets to the wall

TIP: Use an Allen key to help you hang the frame level.

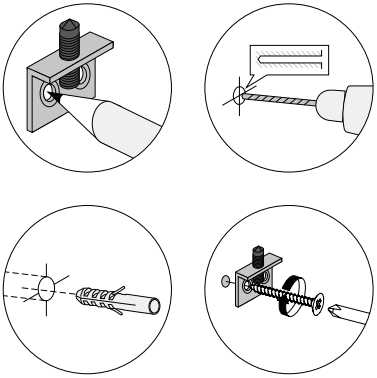

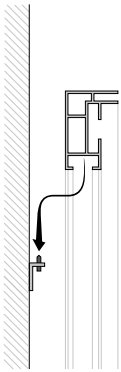

4. Slide the canvas into the frame, starting at the corners

TIP:

- Start at the corners, this will make it easier to get the canvas into the frame.
- Make sure to stretch the canvas so that you can't see any of the white rubber string around the edge from the front.

Well stretched canvas
(you can't see any of the white rubber string around the edge from the front)

Not well stretched
(you can see the white rubber string around the edge from the front)

Still struggling? Scan the QR-code above and watch a video on how to position the canvas.

5. Optional: position the sound-absorbing panels in the frame

TIP: Place the panels with the harder side against the wall. Velcro the corners of the sound-absorbing panels to the wall.

6. Enjoy your artwork

It’s easy to switch out the fabric canvas and create a different mood.

Scan & watch the full tutorial.